SIEMENS

دقیق صنعت پیشرو

2-port valves
VVI46.15 to VVI46.25

3-port valves
VXI46.15 to VXI46.25

2-port valves
VVS46.15 to VVS46.25

3-port valves
VXS46.15 to VXS46.25

acvatix

2-Port and 3-Port Zone Valves PN 16

VVI46... VXI46... VVS46... VXS46...

- Hot-pressed brass valve body (EN1982); VXI46.25T: bronze CC491K (Rg5)
- DN 15, DN 20 and DN 25
- k_{vs} 2…5 m^3/h
- Internally threaded connections Rp… to ISO 7-1 (V…I46…) or solder connections (V...S46…)
- Manual adjuster
- Can be fitted with electromotoric actuators, type SFA… or thermal actuators, type STA…, STS61…

Use

- For use in ventilation and air-conditioning systems for water-side terminal unit control in closed circuits, e.g. for induction units, fan-coil units, small reheaters and small re-coolers.
  - 2-pipe systems with 1 heat exchanger for heating and cooling
  - 4-pipe systems with 2 separate heat exchangers for heating and cooling
- In closed-circuit zone heating systems, e.g. for:
  - Separate floors in a building
  - Apartments
  - Individual rooms

Type summary

VVI46... VVS46...	VXI46… VXS46…	DN	Connections	k_{vs} A → AB [m³/h]	k_{vs} [1)] AB → A [m³/h]	k_{vs} [1)] AB → B [m³/h]
VVI46.15	**VXI46.15**	15	Internally threaded Rp	2.0		1.4
VVI46.20	**VXI46.20**	20		3.5		2.45
VVI46.25	**VXI46.25**	25		5.0		3.5
	VXI46.25T					5.0
VVS46.15	**VXS46.15**	15	Solder connections	2.0		1.4
VVS46.20	**VXS46.20**	20		3.5		2.45
VVS46.25	**VXS46.25**	25		5.0		3.5

[1)] The k_{vs} values in bypass B of the 3-port valves represent only 70 % of the k_{vs} value in the straight-through control path AB ↔ A (exception: VXI46.25T). This compensates for the flow resistance of the heat exchanger or radiator, so keeping the overall flow rate $\dot{V}_{100}$ as constant as possible.

k_{vs} = Nominal flow rate of cold water (5…30 °C) through the fully open valve (H_{100}), by a differential pressure of 100 kPa (1 bar)

Order

When ordering, please specify the quantity, product name and type code.

Example

1 3-port zone valve, type VXI46.15

The type SFA…, STA… and STS61… actuators must be ordered separately.

Delivery

The valves and actuators are delivered in separate packaging.

Equipment combinations

Valves	Motoric actuators SFA...		Thermal actuators STA…, STS61…	
	Δp_{max} [kPa]	Δp_s [kPa]	Δp_{max} [kPa]	Δp_s [kPa]
VVI46.15...25	300	300	200	200
VVS46.15...25				
VXI46.15...25				
VXS46.15...25				
VXI46.25T	200			

Δp_{max} = Maximum permissible differential pressure across the valve's control path, valid for the entire actuating range of the motorized valve (maximum recommended operating differential pressure)

For noiseless operation, the value of 100 kPa should not be exceeded.

Δp_s = Maximum permissible differential pressure at which the motorized valve will close securely against the pressure (close off pressure)

Actuator overview

Actuator	Operating voltage	Positioning signal	Positioning time	Positioning force	Data sheet
Electromotoric					
SFA21/18	AC 230 V	2- position	10 s	200 N	N4863
SFA71/18	AC 24 V				
Thermal					
STA21…	AC 230 V	2- position, PDM [1]	180 s	105 N	N4877
STA71…	AC / DC 24 V				
STA72E…					N4875
STS61…	AC 24 V	DC 0…10 V	< 75 s [2]	125 N	N4880

[1] PDM = pulse duration modulation

[2] refer to data sheet N4880 for details

Sizing

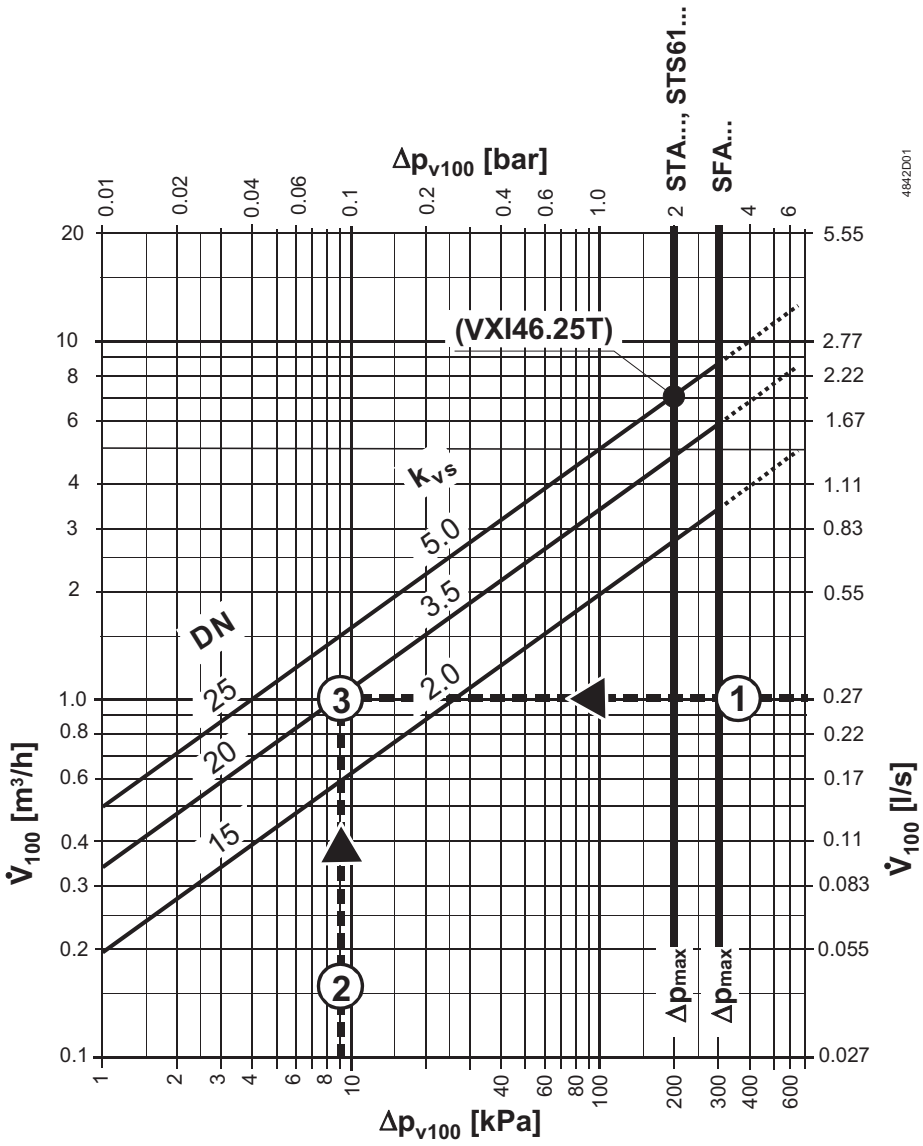

Example:

1 $\dot{V}_{100}$ = 0.27 l/s

2 Δp_{v100} = 9 kPa

3 k_{vs} value required = 3.5 m^3/h

Δp_{v100} = Differential pressure across the fully open valve and the valve's control path A → AB (2-port valves), AB → A (3-port diverting valves) by a volume flow $\dot{V}_{100}$

$\dot{V}_{100}$ = Volume flow through the fully open valve (H_{100})

Δp_{max} = Maximum permissible differential pressure across the valve's control path, valid for the entire actuating range of the motorised valve

Technical design / mechanical design

- Disc throttling element
- Seat ring embedded in through-port
- Seat machined into through-port and bypass
- Reservoir for continuous lubrication of sealing rings
- Return spring

Engineering notes

See also «Mounting notes» and «Commissioning notes».

⚠ It is not allowed to put a shut off at the bypass port B.

Recommendation: **A strainer should be fitted upstream of the valve. This increases reliability.**

Valve construction	Valve series	Valve flow in control mode		Valve stem	
		Inlet A	Outlet AB	Retracted	Extended
2-port valves 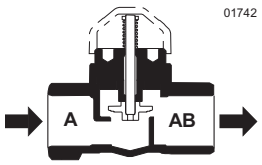	**VV...46...** 	**variable**	**variable**	**A → AB closes**	**A → AB opens**

Warning! **The direction of flow MUST be as indicated by the arrow, from A → AB.**

Valve construction	Valve series	Valve flow in control mode			Valve stem	
		Port AB	Port A	Port B	Retracted	Extended
3-port diverting valves 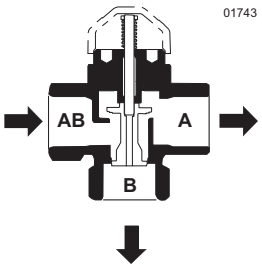	**VX...46...** 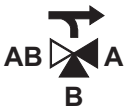	**Inlet: constant**	**Outlet: variable**	**Outlet: variable**	**AB → A closes** **AB → B opens**	**AB → A opens** **AB → B closes**

Warning! **The direction of flow MUST be as indicated by the arrow, from AB → A and AB → B (diverting valves).**

Mounting notes

Orientation

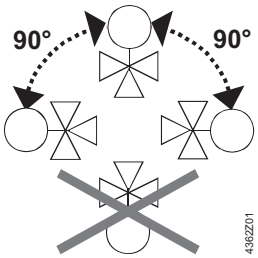

The specified direction of flow must be observed in all cases (see also «Engineering notes»).

The valve and actuator are easily assembled directly on site. There is no need for special tools or calibration..

Warning ⚠

Solder-type valves, V…S46…:
When soldering the connections, the temperature in the vicinity of the O-ring must not exceed 150 °C.
To ensure this, the valve body should be adequately cooled with a wet cloth.

AL50 supporting ring

The AL50 supporting ring must be put into position before mounting the actuator SFA… onto the valve.

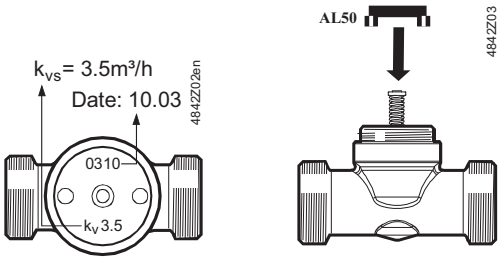

Commissioning notes

Manual adjustment

In the straight-through control path A → AB, respectively AB → A the valve is opened by a return spring.
The straight-through path can be closed manually with the manual adjustment button.
With 3-port valves, this method can be used to open bypass B to 70 % (exception: VXI46.25T).

Maintenance

V…I46… and V…S46… valves require no maintenance.

Caution ⚠

When doing service work on the valve / actuator:

- Deactivate the pump and turn off the power supply
- Close the shuttoff valves
- Fully reduce the pressure in the piping system and allow pipes to completely cool down

If necessary, disconnect the electrical wires.

Before putting the valve into operation again, make certain the manual knob or the actuator is correctly fitted.

Stem sealing gland

The stem sealing gland cannot be exchanged. In the case of leakage, the entire valve must be replaced. Contact your local office or branch.

Disposal

Before disposal the valve must be dismantled and separated into its various constituent materials.
Legislation may demand special handling of certain components, or it may be sensible from an ecological point of view.
Current local legislation must be observed.

Warranty

The technical data given for these applications is valid only in conjunction with the Siemens actuators as detailed under «Equipment combinations»

Use with third-party actuators invalidates any warranty offered by Siemens Switzerland Ltd / HVAC Products.

Technical data

Functional data	PN class		PN 16 to EN 1333
	Permissible operating pressure		1600 kPa (16 bar)
	Valve characteristic		The valves are designed for ON / OFF control only, however they can be operated by modulating 0…10 V thermal actuators too.
	Leakage rate 2-port valve: Path A → AB 3-port valve Path AB – A Bypass AB – B Bypass AB – B	 VXI46.25T	to DIN EN 1349 0…0.05 % of k_{vs}-value 0…0.05 % of k_{vs}-value max. 2…5 % of k_{vs}-value 0…0.05 % of k_{vs}-value
	Permissible media		Chilled water, low-temperature hot water and water with antifreeze; Recommendation: water treatment to VDI 2035
	Medium temperature		+1...110 °C, short-term max. 120 °C
	Nominal stroke		2.5 mm
Standards	Pressure Equipment Directive		PED 97/23/EC
	Pressure Accessories		as per article 1, section 2.1.4
	Fluid group 2		without CE-marking as per article 3, section 3 (sound engineering practice)
Materials	Valve body	 VXI46.25T	hot-pressed brass (EN1982) bronze CC491K (Rg5)
	Stem		stainless steel
	Plug, seat, gland		brass
	Sealing gland		EPDM-O-rings (max. 150 °C)
Dimensions / Weight	Dimensions		refer to «Dimensions»
	Threaded connections		Rp to ISO7-1 (internal thread)
	Actuator connection		M30 x 1.5
	Weight		refer to «Dimensions»

Dimensions

2-port valves

VVI46...

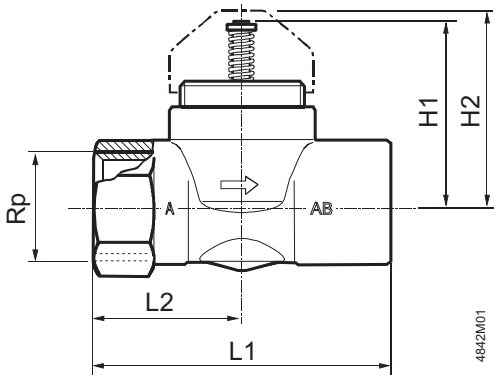

VVS46...

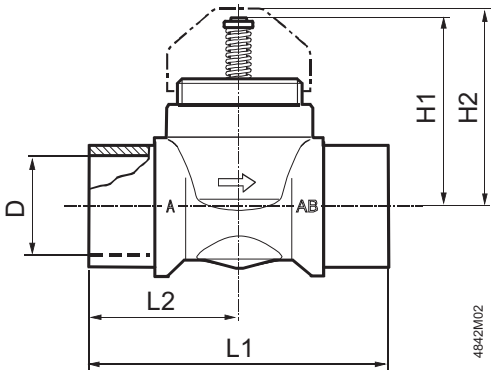

3-port valves

VXI46...

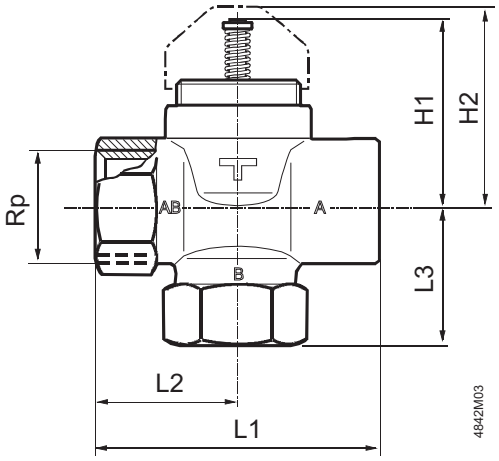

VXS46...

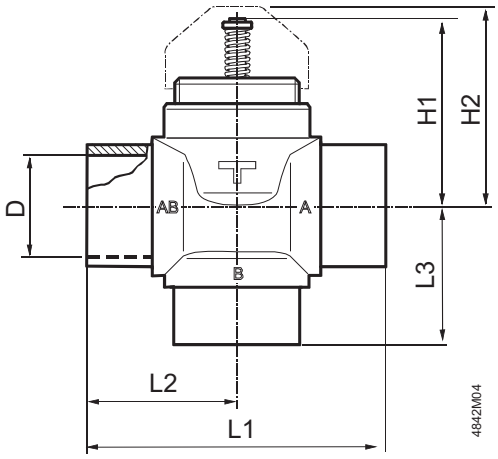

Valve type	DN	Rp [inch]	D[1)] [mm]	D[1)] [inch]	H1 [mm]	H2 [mm]	L1 [mm]	L2 [mm]	kg [kg]
VVI46.15	15	Rp½			45.2	48	60	30	0.28
VVI46.20	20	Rp¾			45.2	48	65	32.5	0.31
VVI46.25	25	Rp1			45.2	48	84	42	0.52
VVS46.15	15		16.0	$^5/_8$	45.2	48	66	33	0.27
VVS46.20	20		22.37	$^7/_8$	45.2	48	70	35	0.32
VVS46.25	25		28.75	$1^1/_8$	45.2	48	89	44.5	0.48

Valve type	DN	Rp [inch]	D[1)] [mm]	D[1)] [inch]	H1 [mm]	H2 [mm]	L1 [mm]	L2 [mm]	L3 [mm]	kg [kg]
VXI46.15	15	Rp½			45.2	48	60	30	30	0.34
VXI46.20	20	Rp¾			45.2	48	65	32.5	32.5	0.38
VXI46.25	25	Rp1			45.2	48	84	42	40	0.63
VXI46.25T										
VXS46.15	15		16.0	$^5/_8$	45.2	48	33	66	33	0.32
VXS46.20	20		22.37	$^7/_8$	45.2	48	35	70	35	0.39
VXS46.25	25		28.75	$1^1/_8$	45.2	48	44.5	89	42.5	0.56