MASTECH®

MS2140A

Dual display digital clamp meter

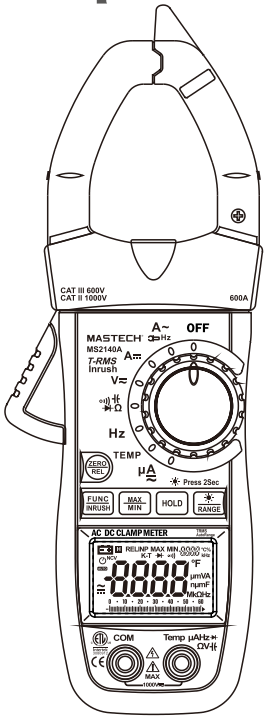

CONTENTS

1. Safety Information.....1
1.1 Preparation.....1
1.2 Usage.....2
1.3 Safety symbols on the meter.....3
1.4 Maintenance.....4
2. Features and Components.....4
2.1 Components.....5
2.2 Buttons and switches.....7
2.3 Display Description.....7
3. Specification.....9
3.1 General Specifications.....9
3.2 Technical Specifications.....10
4. Operations Guide.....16
4.1 Display Hold.....16
4.2 Manual Measurement.....16
4.3 Backlight and Clamp light.....16
4.4 Maximum/Minimum recording.....17
4.5 Function switching.....17

MASTECH®

CONTENTS

4.6 ZERO/REL.....17
4.7 INRUSH.....18
4.8 Auto Power Off.....18
4.9 Measuring Preperation.....18
4.10 Current Measurement.....19
4.11 Voltage Measurement.....19
4.12 Frequency and Duty Cycle.....20
4.13 Resistance.....20
4.14 Diode Test.....21
4.15 Continuity.....21
4.16 Capacitance.....22
4.17 Inrush Current Measurement.....22
4.18 Temperature.....23
4.19 μA Current Measurement.....23
4.20 NCV Sensitivity and settings.....23
5. Maintenance.....24
5.1 Replacing the batteries.....24
5.2 Test Leads Replacement.....25
6. Accessories.....25

1. Safety Information

⚠WARNING

TO REDUCE THE RISK OF FIRE, ELECTRICAL SHOCK, PRODUCT DAMAGE OR PERSONAL INJURY, PLEASE FOLLOW THE SAFETY INSTRUCTIONS DESCRIBED IN THE USER MANUAL. READ THE USER MANUALS BEFORE USING THE METER.

This meter has met IEC61010-1 and IEC-61010-2-032 standards with an overvoltage category of 600V CAT III and a pollution degree of 2. Follow safe operation procedures to ensure the long life and safe use of this instrument.

1.1 Preparation

1.1.1 When using the meter, follow the following safety rules:
-Take precautions to prevent electrical shock
-Do not misuse the instrument

1.1.2 Check the meter and accessories thoroughly before using.

1.1.3 Check to see if the meter or any components were damaged during shipment.

1.1.4 Inspect test leads and probes for cracks, breaks or crazes on the insulation before using the meter.

1.1.5 Use test leads provided with the unit. If necessary, replace test leads with identical specifications.

1.2 Usage

1.2.1 Turn the rotary switch to the required function and range to be measured.

1.2.2 Never use the meter to measure voltages that might exceed 600V DC/AC above earth ground.

1.2.3 Always be careful when working with voltages above 60V DC or 30V AC RMS. Keep fingers behind the probe barriers while measuring.

1.2.4 The "⚠" symbol next to the input lead shows that the input voltage or current should not exceed the specified value in order to protect the internal circuit from damage.

1.2.5 Choose the highest range when the value to be measured is unknown.

1.2.6 Remove test leads before switching functions on the rotary switch.

1.2.7 Do not perform resistance, capacitance, diode and continuity measurements on powered circuits.

1.2.8 Never connect the test leads across a voltage source while the rotary switch is in the resistance, diode or continuity mode. Doing so can damage the meter.

1.2.9 Power off the circuit and discharge capacitors before testing capacitance.

1.2.10 Do not place the meter in any environment with high pressure, high temperature, dust, explosive gas or vapor.

1.2.11 Stop using the meter if any failure or abnormal function is observed.

1.2.12 Do not use meter unless battery cover is in place a secured.

1.2.13 Avoid direct sunlight, exposing batteries to humidity, any strong magnetic field, or high temperatures to ensure the extended life of the meter.

1.3 Safety symbols on the meter

⚠	Note-Important safety information, refer to the instruction manual.
⚡	Application around and removal from UNINSULATED HAZARDOUS LIVE conductors is permitted.
⚠	Caution, possibility of electric shock
⧈	Equipment protected throughout by double insulation or reinforced insulation.
CE	Complies with European (EU) safety standards
⏚	Earth (ground) TERMINAL
⎓	Direct current
∼	Alternating current
c ETL us intertek	Conforms to UL STD. 61010-1, 61010-2-032, 61010-2-033; Certified to CSA STD C22.2 NO. 61010-1, 61010-2-032,61010-2-033

CAT II: MEASUREMENT CATEGORY II is applicable to test and measuring circuits connected directly to utilization points (socket outlets and similar points) of the low-voltage MAINS installation.

CAT III: MEASUREMENT CATEGORY III is applicable to test and measuring circuits connected to the distribution part of the building's low-voltage MAINS installation.

1.4 Maintenance

1.4.1 To avoid electric shock or personal injury, repairs or servicing not covered in this manual should be performed only by qualified personnel.

1.4.2 Remove test leads before opening battery cover

1.4.3 To avoid incorrect readings causing electric shock or personal injury, when low battery symbol "▭"appears replace batteries immediately.

1.4.4 The meter can be cleaned with a soft cloth to remove any oil, grease or grime. Do not use liquid solvent or detergent.

1.4.5 When the instrument is not in use, turn rotary switch to "OFF"

1.4.6 If the instrument is not to be used for an extended period of time, remove the batteries to prevent damage to the instrument.

2. Features and Components

The MS2140A is a portable, hand-held yet professional meter that features an LCD with backlight, overload protection and low battery indicator. These meters are easy to use with one hand, suitable for professional users or amateurs, and ideal for school or home use.

-Auto and manual range

-Reading Hold function

-Max measurement

-Min measurement

-Frequency in clamp mode

-Auto power off

-Relative measurement

- Inrush measurement

2.1 Components

(1) Non-Contact Voltage detection sensor
(2)NCV indicator
(3)Work light
(4)Rotary Switch
(5)Function buttons
(6)Input sockets
(7)Clamp trigger
(8)Clamp: for current measurement

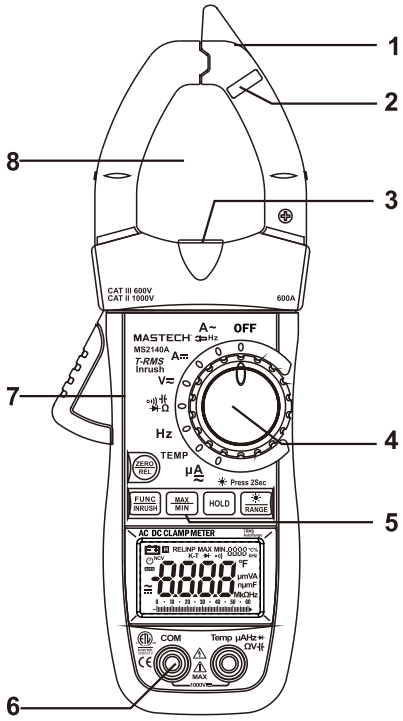

2.2 Buttons and switches

☀ **/RANGE** button: backlight/switch ranges in manual mode
FUNC button: switch measurement functions
HOLD button: hold reading on screen
REL/ZERO button: relative reading/DC zero offset
INRUSH button: measure Inrush current
MAX/MIN button: switch between max/min readings
Rotary Switch: switch between measurements
INPUT jack: voltage, current, resistance, capacitance, diode, continuity, frequency, duty cycle, temperature input terminal
COM jack: common input terminal

2.3 Display Description

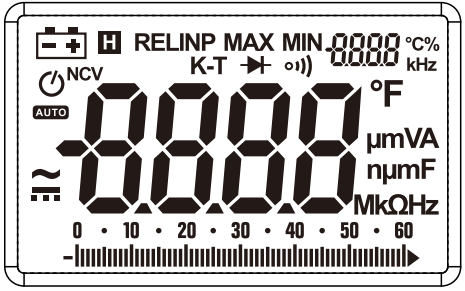

≅	AC/DC
⊣▷ ◦)))	Diode, Continuity
AUTO	Auto-range
MAX /MIN	Maximum/Minimum display
INR	Inrush
REL	Relative measurement mode
⏻	Auto Power Off
▭	Low Battery
H	Display Hold
%	Percentage (Duty Cycle)
mV,V,A	millivolts, volts, amps
nF,µF,mF	nanofarad, microfarad, millifarad
Ω,kΩ,MΩ	ohms, kiliohms, megaohms
Hz, kHz, MHZ	hertz, kilohertz, megahertz
K-T	K-type thermocouple measurement
°C,°F	celcius, fahrenheit
NCV	Non-contact voltage

3. Specifications

The Meter should be calibrated annually between 18°C ~ 28°C and a relative humidity less than 75%.

3.1 General Specifications

- Manual and Auto Mode
- Power Overload Protection
- Maximum Voltage Between Circuit and Ground: 1000V DC or 1000V AC
- Maximum Working Height: 2000m
- Display: LCD
- Maximum Display Number: 5999
- Auto Polarity Indication, '-'Indicates Negative
- Overload Indication: '0L' Or '-0L'
- Sampling Frequency: 4 Times / Sec
- Units Display: Display Functions and Units.
- Auto Power Off: 20 Minutes
- Input Power : 4.5V DC
- Battery Type: AAA
- Low Battery Indication: LCD Display "[battery]"
- Temperature: Less Than 0.1 X Specified Accuracy/°C
- Working Environment Temperature: 18°C ~28°C
- Storage Temperature:-10°C ~50°C
- Size :233x108x32mm
- Weight: ~380g (Including battery)

3.2 Technical Specifications

3.2.1 True RMS Characteristics

3.2.1.1 For non-sinusoidal signal measurements, true RMS is a more accurate method of measurement over the averaging method.

3.2.2 AC Current

Range	Resolution	Accuracy
60A	0.01A	±(1.8% of reading + 10 digits)
600A	0.1A	

- Maximum input current: 600A AC
- Frequency range: 50 ~ 60Hz

3.2.3 DC Current

Range	Resolution	Accuracy
60A	0.01A	±(3% of reading + 10 digits)
600A	0.1A	

-Maximum input current :600A DC

3.2.4 Inrush Current

Range	Resolution	Accuracy
60A	0.01A	< 60A for reference only
600A	0.1A	±(10% reading + 60 digits)

Integration time: 100ms; Measuring range: 10 ~ 600A

3.2.5 DC Voltage

Range	Resolution	Accuracy
600mV	0.1mV	±(0.5% of reading + 3 digits)
6V	0.001V	
60V	0.01V	
600V	0.1V	
1000V	1V	

-Input impedance: 10MΩ.
-Maximum input voltage:600V AC (RMS) or 600V DC
-600mV range: only by pressing RANGE button.

Note:
At small voltage ranges, unsteady readings will appear before the test leads make contact with the circuit.
This is normal since the Meter is highly sensitive.
When the test leads are connected to the circuit, the true reading will be shown.

3.2.6 AC Voltage

Range	Resolution	Accuracy
600mV	0.1mV	±(0.8% of reading + 3 digits)
6V	0.001V	
60V	0.01V	
600V	0.1V	
1000V	1V	

-Input impedance:10MΩ.
-Maximum input voltage: 600V AC (RMS) or 600V DC
-Frequency range:50 ~ 60Hz
-600mV range: only by pressing RANGE button.

Note:
At small voltage ranges, unsteady readings will appear before the test leads make contact with the circuit.
This is normal since the Meter is highly sensitive.
When the test leads are connected to the circuit, the true reading will be shown.

3.2.7 Frequency

3.2.7.1 Frequency through Clamp Measuring (A Mode)

Range	Resolution	Accuracy
60Hz	0.01Hz	±(1.5% of reading + 5 digits)
600Hz	0.1Hz	
1kHz	1Hz	

-Measuring range: 10Hz ~ 1kHz
-Input range⩾1A AC (RMS) (Input current should increase as circuit frequency increases.)

3.2.7.2 Frequency through “V” mode:

Range	Resolution	Accuracy
60Hz	0.01Hz	±(1.5% of reading + 5 digits)
600Hz	0.1Hz	
6kHz	1Hz	
10kHz	10Hz	

-Measuring range:10Hz ~ 1kHz
-Input range⩾20mA AC(RMS) (Input current should increase as circuit frequency increases.))

3.2.7.3 Frequency Through "HZ" Mode:

Range	Resolution	Accuracy
60Hz	0.01Hz	±(0.3% of reading + 5 digits)
600Hz	0.1Hz	
6kHz	1Hz	
60kHz	0.01kHz	
600kHZ	0.1kHZ	
6MHZ	1kHZ	
60MHZ	0.01MHZ	

- Input signal: VPP 3V square wave; Overload Protection: 250V DC or AC (RMS)

3.2.8 Duty Cycle

Range	Resolution	Accuracy
5-95%	0.1%	±3.0%

When measuring frequencies > 60KHz, duty cycle measurement range is 10 to 90%

3.2.9 Resistance

Range	Resolution	Accuracy
600Ω	0.1Ω	±(0.8% of reading + 3 digits)
6kΩ	0.001kΩ	
60kΩ	0.01kΩ	
600kΩ	0.1kΩ	
6MΩ	0.001MΩ	±(1.2% of reading + 3 digits)
60MΩ	0.1MΩ	

- Overload protection: 250V DC or AC (RMS)

3.2.10 Continuity

Range	Resolution	Accuracy
)))	0.1Ω	The Meter will beep if measurement is less than 30Ω

- Overload protection: 250V DC or AC (RMS)
- Open circuit voltage: about 3V

3.2.11 Capacitance

Range	Resolution	Accuracy
6nF	0.001nF	±(5.0% of reading + 5 digits)
60nF	0.01nF	±(4.0% of reading + 5 digits)
600nF	0.1nF	
6μF	0.001μF	
60μF	0.01μF	
600μF	0.1μF	
6mF	0.001mF	
60mF	0.01mF	

- Overload protection: 250V DC or AC (RMS)

3.2.12 Diode

Range	Resolution	Accuracy
⊣▶⊢	0.001V	Displays approximate forward voltage.

- Forward DC current: about 1mA
- Open circuit voltage: about 2.8V
- Overload protection: 250V DC or AC (RMS)

3.2.13 Temperature

Range	Resolution	Accuracy
-10°C~500°C (-14°F to 932°F)	0.1°C/ 0.2°F	±1.0% of reading + 0.8°C (±1.0% of reading + 0.8°F)
-40°C~ -10°C (-40°F to -14°F)		±5.0% of reading + 1.5°C (±5.0% of reading + 3.3°F)

Note: The accuracy does not include K-type thermocouple error.

3.2.14 AC μA Current

Range	Resolution	Accuracy
200.0μA	0.1μA	±(1.0% of reading + 5 digits)
2000μA	1μA	

-Frequency range: 50 ~ 60Hz;
- Overload protection: 250V DC or AC (RMS)

3.2.15 DC μA Current

Range	Resolution	Accuracy
200.0μA	0.1μA	±(1.0% of range + 5 digits)
2000μA	1μA	

- Overload protection: 250V DC or AC (RMS)

4. Operations Guide

4.1 Display Hold

During measuring, press the **"HOLD"** button once to hold the reading, press again to release hold.

4.2 Manual Measurement

When using the rotary switch to switch between current, voltage, capacitance and frequency mode, the default range type is Auto. Press **"RANGE"** button to enter manual mode. Each press increases the measuring range and will return to auto-range after maximum has been reached.

Note:

Manual Measurement Mode is disabled when performing frequency measurement.

4.3 Backlight and Clamp light

1) Press the "☀/RANGE"button for 2 seconds to turn on the display backlight; the backlight will stay on for 20 seconds before it is automatically turned off.
2)When the backlight is on, press the "☀/RANGE"for 2 seconds to turn off the backlight.
3) In current mode, turning on the backlight will also trigger the clamp light

Note: Backlight/clamp light uses and LED; even though the light will auto off after 20 seconds, use only when needed to conserve power.

4.4 Maximum/Minimum recording

1) Press **"MAX/MIN"** button once to display the maximum measurement and press **"MAX/MIN"** button again to display the minimum, press **"MAX/MIN"** button a third time to return to normal mode.
2) In Max/Min mode, measurement is saved automatically.
3) Max/Min values are displayed on the secondary display while the current measured value is displayed on the main display.

Note:

1) The Meter is set to manual mode when using Max/Min measurement.

4.5 Function switching

1) When rotary switch is on Resistance, Diode, capacitance, and continuity mode, press **"FUNC"** button to switch between those four.
2) When rotary switch is on Voltage and Current mode, press **"FUNC"** button to switch between AC and DC.

4.6 ZERO/REL

1) Press **"ZERO/REL"** button to enter relative measurement mode. When in this mode, the current reading will be stored and shown on the secondary display while the main display with show the difference of current reading and stored reading. REL Δ (Output) = (current reading) – (reading when button pressed).
2) **"REL"** can only perform under manual mode.

4.7 INRUSH

When in AC Current measurement mode, press the **"INRUSH"** button to enter surge current measurement mode. Press button again to return to normal mode.

4.8 Auto Power Off

1) When not in use, the meter will automatically turn off after 20 minutes.
2) After Auto Off, press any button to bring power back on.
3) To disable Auto Off, hold **"ZERO/REL"** when turning on the Meter.
4) When auto power off is on, symbol appears on, ⏻ symbol appears on screen. screen.When disabled, ⏻ symbol does not appear.

4.9 Measuring Preperation

1) Turn on the meter by turning the rotary switch. If battery voltage is low (⩽ 3.6V), "▭" appears; replace the battery.
2) "⚠"indicates input voltage or current should not exceed the indicated value; this is to protect the meter from damage.
3) Turn the rotary switch to the proper position.
4) When connecting to the circuit, connect **COM** input first before connecting to power. Remove the power lead first when disconnecting from the circuit.

4.10 Current Measurement

1) For AC current move rotary switch to A~ position; for DC current move rotary switch to A⎓ position.
2) Open the clamp head by pressing the trigger and inserting the conductor to be measured.
3) When measuring AC current, the main display shows the measured current value while the secondary display shows the frequency of the measured current

Note:

1) Measuring two or more wires together will cause false readings.
2) The wire being measured should be centered within the clamp.
3) "⚠"indicates the maximum input AC/DC current is 600 A.
4) For higher accuracy, when measuring DC current if Display shows non zero, press **"ZERO/REL"** button to reset the reading to zero.

4.11 Voltage Measurement

1) Insert the black test leads into **"COM"** input and red test lead into **"INPUT"** input, choose proper range.
2) Move rotary switch to **V≂** position. AC voltage is default measurement. Press **"FUNC"** to switch to DC voltage.
3) For mV measurement, press **"RANGE"** button until in mV range.
4) Connect test leads to voltage source or load.
5) Voltage measurement will be shown on main display.

Note:

1) When measuring low voltage source, the meter When measuring low voltage sources, the reading will fluctuate on the display when the test leads are not connected to the circuit. This is normal due to the high sensitivity of the Meter. The Meter will display correct reading once the leads are connected to the circuit.

4.12 Frequency and Duty Cycle

1) Insert the black test leads into **"COM"** input and red test lead into **"INPUT"** input
2) Turn rotary switch to **"Hz"** position.
3) Connect test leads to the voltage source or between loads.

Note:

Frequency range is 10Hz ~ 60MHz. For frequencies below 10Hz, display will show "00.0." For frequencies about 60kHz, duty cycle measurement accuracy is not guaranteed.

4.13 Resistance

1) Insert the black test leads into **"COM"** input and red test lead into **"INPUT"** input
2) Turn rotary switch to "•))" position for resistance measurement.
3) Connect the test leads across the circuit or resistors and read value on LCD.

Note:

1) When the circuit is an open circuit, the Meter displays **"OL"** for overload.
2) For measurements above 1MΩ, the meter will take a few seconds to stabilize the reading; this is normal for high resistance measurements.

4.14 Diode Test

1) Insert the black test leads into **"COM"** input and red test lead into **"INPUT"** input
2) Turn rotary switch to "•ı)) "position and push **"FUNC"** twice for diode ▶| test.
3) Connect the black lead to the cathode (-) and the red lead to the anode (+) and read the value from the LCD.

Note:

1) The meter displays the forward biased value.
2) If the diode is connected backward or is an open circuit, the Meter will display **"OL"**.

4.15 Continuity

1) Insert the black test leads into **"COM"** input and red test lead into **"INPUT"** input
2) Turn rotary switch to "•ı)) " position and push **"FUNC"** once for continuity •ı)) test.
3) Connect leads to the circuit terminals.
4) The meter will beep if the reading is below 30Ω.
5) Screen will show resistance value

Note:

The Meter displays **"OL"** if the circuit is open or resistance is larger than 600Ω.

4.16 Capacitance

1) Insert the black lead into **"COM"** input and the red lead into **"INPUT"** input.
2) Turn the rotary switch to " •ı)) " position and push **"FUNC"** three times for capacitance ⊣⊢.
3) Place leads at the terminals of the capacitor after it is fully discharged.
4) Read the measurement from the display.

4.17 Inrush Current Measurement

1) Turn rotary switch to **"A"** position
2) Push **"INRUSH"**button to enter inrush current mode.
3) Open the clamp head by pressing the trigger and inserting the conductor to be measured.
4) Power on the circuit being tested
5) Largest value will be held on main display

Note:

1) Measuring two or more wires together will cause false readings.
2) The wire being measured should be centered within the clamp.
3) The Meter displays **"OL"** if the circuit is overloaded. Choose a larger range if possible.
4) Choose the largest range if the range of the circuit is unknown.

4.18 Temperature

1) Turn rotary switch to **"TEMP"** position.
2) Insert K-type thermocouple into the multi-function socket with the "+" end in **"INPUT"** input and "-" into **"COM"** input.
3) Temperature reading will show on main display.

4.19 µA Current Measurement

1) Insert the black lead into **"COM"** input and the red lead into **"INPUT"** input.
2) Turn the rotary switch to **µA** position.
3) Push **"FUNC"** to switch between AC/DC current
4) Connect test leads to circuit.
5) Current measurement will be shown on main display.

4.20 NCV Sensitivity and settings

1) Hold **"FUNC"** when you turn on the meter and the following display will show up on the LCD:

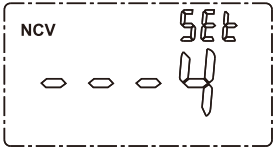

2) Push the **"RANGE"** button to adjust the NCV sensitivity from 0-4. '4' is the highest sensitivity where '0' will turn off the NCV functionality.
3) Push the **"HOLD"** button to save the selected sensitivity and return to normal meter operation.
4) With the NCV function active (sensitivity between 1-4), if the sensor at the top of the clamp gets close to a live conductor (AC voltage >90V) the NVC indicator will flash and buzzer will sound.

Note:

1) Even though there is no indication, voltage may still exist. Do not rely solely on NCV detector to determine the presence of voltage in a wire. The measurement may be affected by the design of the outlet, type of insulation and other external factors.
2) The voltage sensing indicator may turn on when a voltage is fed to the meter.
3) Other external interference (ex. Flashlight, motor) may trigger the NCV sensor.

5. Maintenance

5.1 Replacing The Batteries

⚠ WARNING

To avoid electric shock, make sure that the test leads have been clearly move away from the circuit under measurement before opening the battery cover of the meter.

⚠ WARNING

Do not mix old and new batteries. Do not mix alkaline, standard (carbon-zinc), or rechargeable (ni-cad, ni-mh, etc) batteries.

5.1.1 If the sign " [−+] " appears, it means that the batteries should be replaced.
5.1.2 Loosen the fixing screw of the battery cover and remove it.
5.1.3 Replace the exhausted batteries with new ones.
5.1.4 Put the battery cover back and fix it again to its origin form.

Note:

Do not reverse the polarity of the batteries.

5.2 Replacing Test Leads

Replace test leads if leads become damaged or worn.

⚠ WARNING

Use meet EN 61010-031 standard, rated CAT II 1000V CAT III 600V, or better test leads.

6. Accessories

1) Test Leads:	Rating:1000V 10A	1 pair
2) User's Manual		1 pcs
3) Batteries:	AAA Battery	3 pcs
4) K-type thermocouple		1 pcs
5) Multi-function socket		1 pcs